DocuSign Envelope ID: 683A808E-0B0B-4CC7-833E-E2247A5302C8

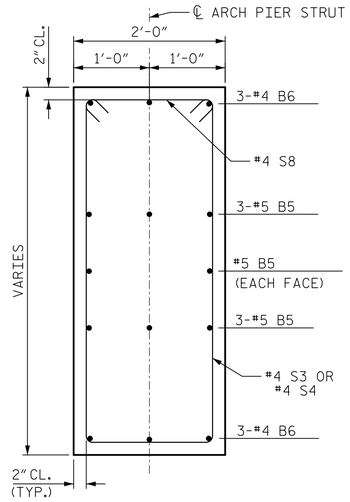

SECTION D-D

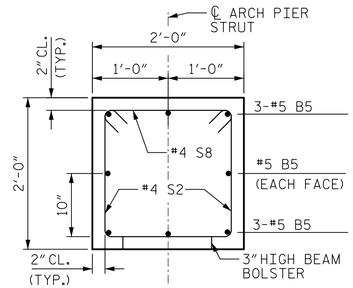

SECTION E-E

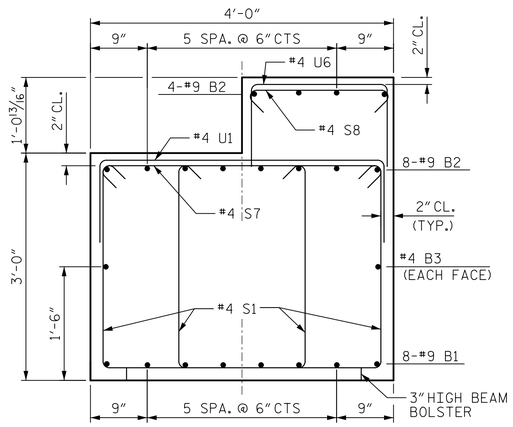

SECTION B-B

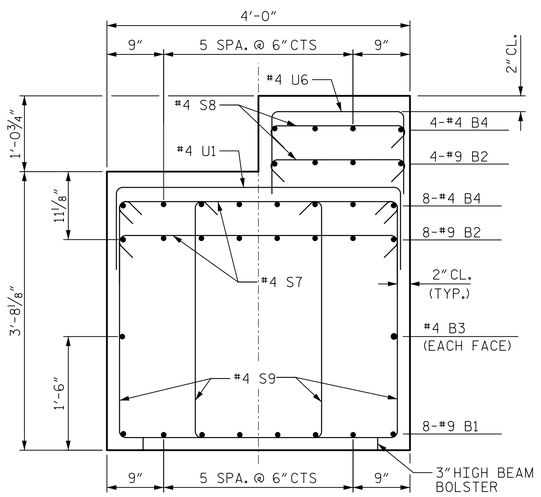

SECTION C-C

BAR TYPES

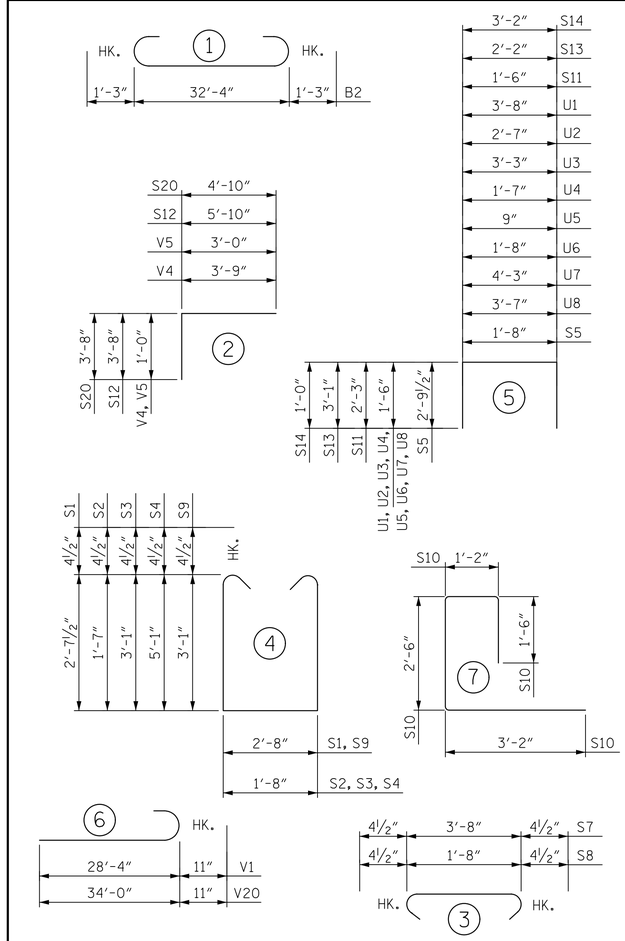

ALL BAR DIMENSIONS ARE OUT TO OUT

BILL OF MATERIAL

ARCH PIER 6

BAR	NO.	SIZE	TYPE	LENGTH	WEIGHT	BAR	NO.	SIZE	TYPE	LENGTH	WEIGHT
B1	8	#9	STR	33'-5"	909	U1	41	#4	5	6'-8"	183
B2	12	#9	1	34'-10"	1421	U2	2	#4	5	5'-7"	7
B3	4	#4	STR	17'-5"	47	U3	2	#4	5	6'-3"	8
B4	12	#4	STR	13'-8"	110	U4	4	#4	5	4'-7"	12
B5	16	#5	STR	17'-9"	296	U5	4	#4	5	3'-9"	10
B6	24	#4	STR	4'-8"	75	U6	34	#4	5	4'-8"	106
B7	28	#7	STR	9'-8"	553	U7	2	#4	5	7'-3"	10
B8	10	#4	STR	9'-8"	65	U8	2	#4	5	6'-7"	9
S1	68	#4	4	8'-6"	386	V1	12	#8	6	29'-3"	937
S2	22	#4	4	5'-7"	82	V2	20	#4	STR	2'-9"	37
S3	4	#4	4	8'-7"	23	V3	36	#4	STR	14'-10"	357
S4	4	#4	4	12'-7"	34	V4	4	#4	2	4'-9"	13
S5	236	#4	5	7'-3"	1143	V5	6	#4	2	4'-1"	16
S6	124	#4	STR	9'-8"	801	V6	8	#4	STR	5'-9"	31
S7	82	#4	3	4'-5"	242	V7	8	#4	STR	6'-5"	34
S8	112	#4	3	2'-5"	181	V8	6	#5	STR	5'-9"	36
S9	48	#4	4	9'-5"	302	V9	6	#5	STR	5'-4"	33
S10	6	#4	7	8'-4"	33	V10	6	#5	STR	6'-10"	43
S11	128	#4	5	6'-0"	513	V11	6	#5	STR	6'-5"	40
S12	22	#4	2	9'-6"	140	V12	8	#4	STR	6'-10"	37
S13	80	#5	5	8'-4"	695	V13	8	#4	STR	7'-6"	40
S14	6	#4	5	5'-2"	21	V14	4	#4	STR	17'-1"	46
S15	4	#4	STR	7'-8"	20	V15	4	#4	STR	17'-9"	47
S16	4	#4	STR	7'-5"	20	V16	4	#4	STR	18'-6"	49
S17	4	#4	STR	6'-0"	16	V17	4	#4	STR	19'-2"	51
S18	4	#4	STR	4'-7"	12	V18	4	#4	STR	19'-11"	53
S19	4	#4	STR	3'-3"	9	V19	4	#4	STR	20'-7"	55
S20	2	#4	2	8'-4"	11	V20	12	#8	6	34'-11"	1119
						V21	4	#4	STR	20'-11"	56

REINFORCING STEEL PIER 6	11635 LBS.
TOTAL CLASS A CONCRETE	87.3 C.Y.
POUR 1 (BASE)	12.2 C.Y.
POUR 2 (COLUMNS)	45.4 C.Y.
POUR 3 (SUB CAP & STRUTS)	13.5 C.Y.
POUR 4 (CAP)	16.2 C.Y.

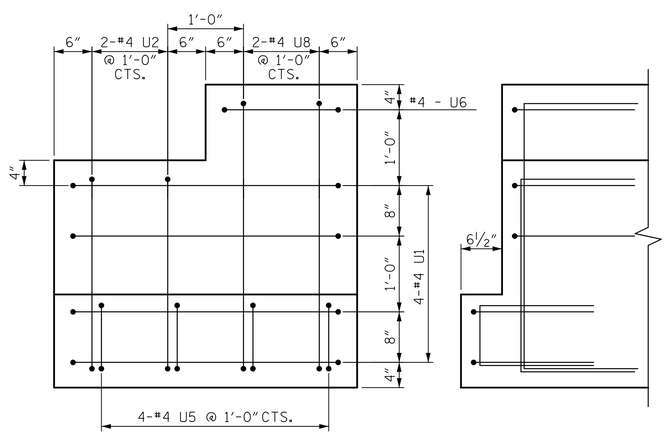

LEFT END ELEVATION

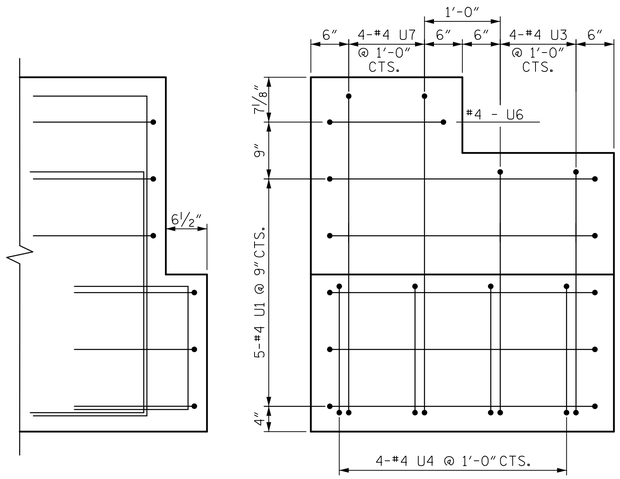

RIGHT END ELEVATION

DRAWN BY : K.M. DONALD	DATE : 03/2018		
CHECKED BY : J.E. SLOAN	DATE : 03/2018		
DESIGNED BY : K.M. DONALD	DATE : 02/2018		
DESIGN CHECKED BY : N.K. BROWN	DATE : 03/2018		

DOCUMENT NOT CONSIDERED FINAL UNLESS ALL SIGNATURES COMPLETED

PROJECT NO. B-4974

STANLY/MONTGOMERY COUNTY

STATION: 339+86.39 -L-

SHEET 6 OF 6

AECOM

AECOM TECHNICAL SERVICES, INC.
701 CORPORATE CENTER DRIVE, SUITE 475
RALEIGH, NC 27607
(919) 854-6200 www.aecom.com
AECOM License No. F-0342

NORTH CAROLINA PROFESSIONAL SEAL 035062 ENGINEER JOHN E. SLOAN
Docusigned by:
DocuSign Envelope ID: 683A808E-0B0B-4CC7-833E-E2247A5302C8
8/30/2018

STATE OF NORTH CAROLINA
DEPARTMENT OF TRANSPORTATION
RALEIGH

SUBSTRUCTURE

ARCH PIER 6
DETAILS

REVISIONS								SHEET NO.
NO.	BY:	DATE:	NO.	BY:	DATE:			S-84
1			3					TOTAL SHEETS
2			4					148

DATE: 8/28/2018
TIME: 2:46:03 PM
USER: nattjam
DGN: \\USRAL3TP0DN\aecomnet.com\Data\Projects\60536253\900_Work\910_CADD_NCDOT_TIPS\Structures\04 Drawings\450_B9_B4974_SM0_AP16.dgn